# TYPE 2 - 462 SERIES (4-5/8" THROAT) W/ 2" FLUSH TRIM
# GLASS BASE (DRYWALL)

F

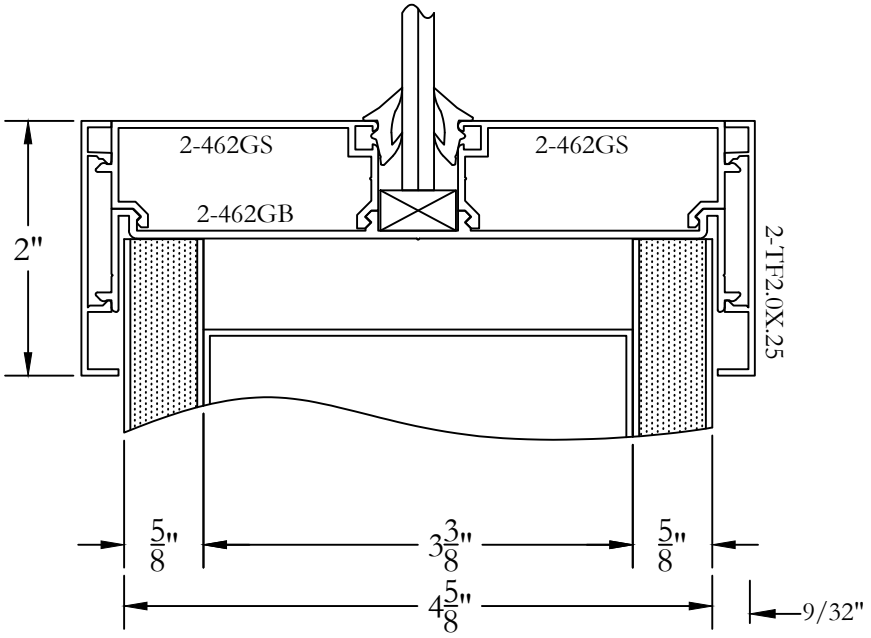


*Bringing new light to interior achitecture*

FRAMEWORKS

Frameworks Manufacturing
1910 Cypress Station Dr
Suite #100
Houston, Texas 77090

Phone: 713-692-5222
www.frameworks.com
email: orders@frameworks.com